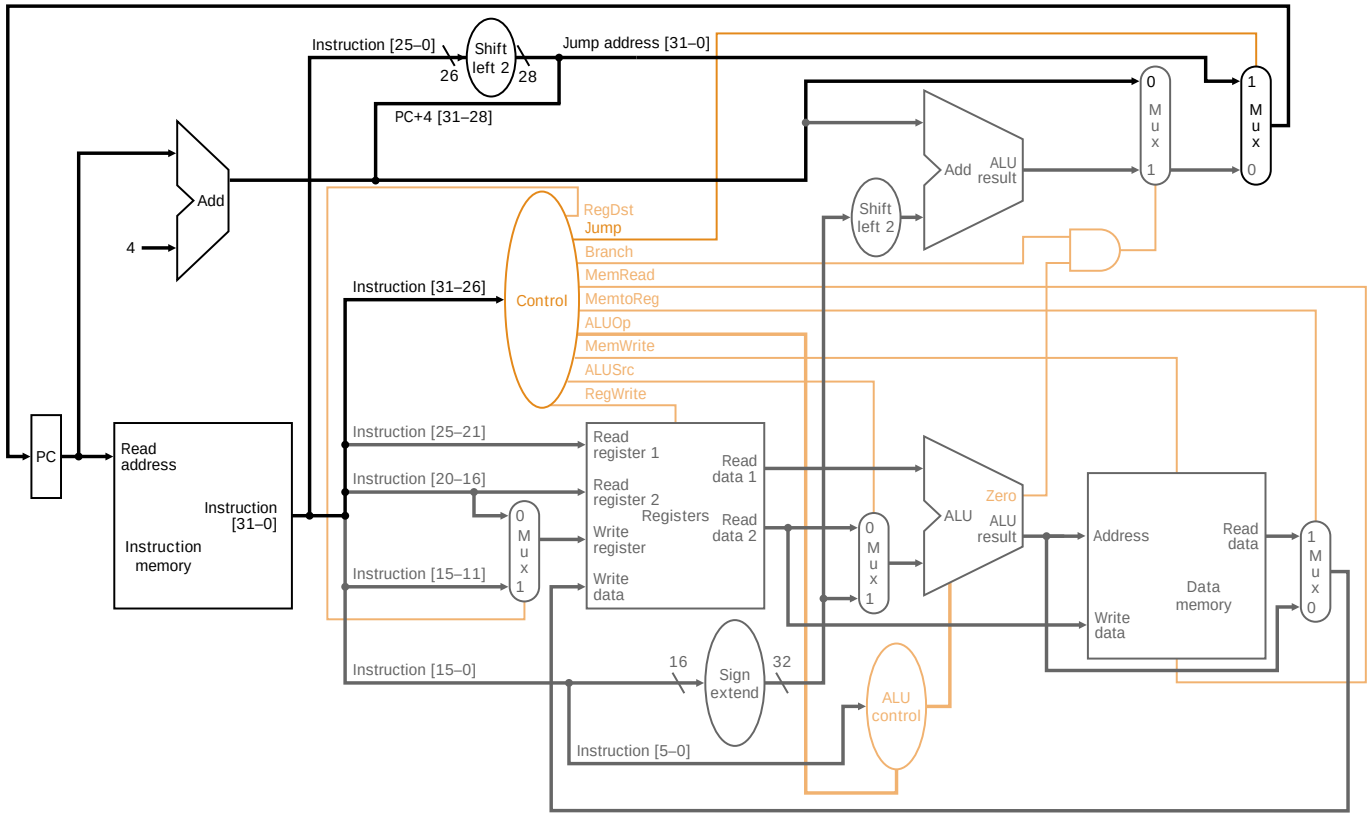
Instruction [25–0]
Shift left 2
26
28
Jump address [31–0]
PC+4 [31–28]
Add
4
0
M
u
x
1
1
M
u
x
0
Add
ALU result
Shift left 2
RegDst
Jump
Branch
MemRead
MemtoReg
ALUOp
MemWrite
ALUSrc
RegWrite
Control
Instruction [31–26]
PC
Read address
Instruction [31–0]
Instruction memory
Instruction [25–21]
Instruction [20–16]
Instruction [15–11]
Instruction [15–0]
Instruction [5–0]
Read register 1
Read register 2
Registers
Write register
Write data
Read data 1
Read data 2
Zero
ALU
ALU result
Address
Read data
Data memory
Write data
16
Sign extend
32
ALU control